312312

24225

3 Hours / 70 Marks Seat No. | | | | | | | | |

Instructions :

(1) All Questions are *compulsory.*

(2) Illustrate your answers with neat sketches wherever necessary.

(3) Figures to the right indicate full marks.

(4) Assume suitable data, if necessary.

(5) Use of Non-programmable Electronic Pocket Calculator is permissible.

(6) Mobile Phone, Pager and any other Electronic Communication devices are not permissible in Examination Hall.

Marks

1. Attempt any FIVE of the following : 10

(a) Define Statics and Dynamics.

(b) State Lami's theorem.

(c) Define Centroid and Centre of gravity.

(d) Define Force and state its S.I. unit.

(e) Define angle of Repose.

(f) State ideal machine and write its any two characteristics.

(g) Define effort and load.

2. Attempt any THREE of the following : 12

(a) For a certain machine, V.R. is 140. To lift a load of 10 kN, an effort of 100 N is required. Calculate the effort required to lift a load of 45 kN.

(b) For a simple lifting machine the law of machine is P = (0.08 W + 5) N. Calculate the effort required to lift a load of 5 kN. Also calculate the max. M.A. and identify the machine type when V.R. = 20.

(c) In a single purchase crab length of effort handle is 40 cm; diameter of load drum = 20 cm, number of teeth in pinion = 16 nos, number of spur = 80 nos. Find (i) Velocity Ratio (ii) Effort required to raise (lift) load of 2 kN with efficiency of 75%.

(d) Explain law of machine. State its use.

3. Attempt any THREE of the following : 12

(a) A weight of 100 N is attached by two string. Calculate the tension in the string. Use the following Fig.-1

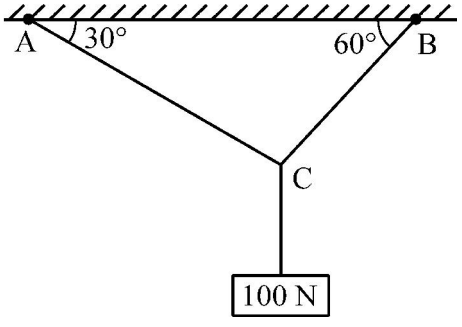

Fig. – 1

(b) Find the support reaction for the given simply supported beam. (Ref. Fig.-2)

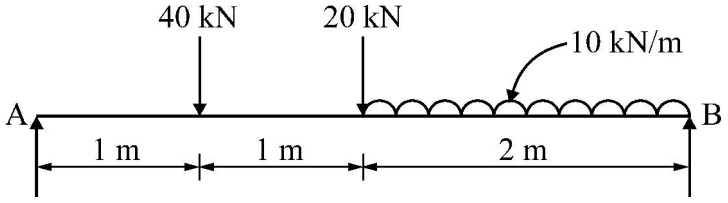

Fig. – 2

(c) Find the reaction at roller and hinge support of a beam loaded as shown in Fig.-3.

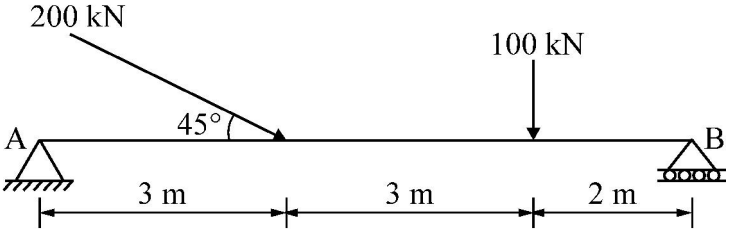

Fig. – 3

(d) Explain the term Free Body Diagram with the help of neat sketch.

4. Attempt any THREE of the following : 12

(a) Determine the resultant of coplanar non-concurrent forces as shown in Fig.-4.

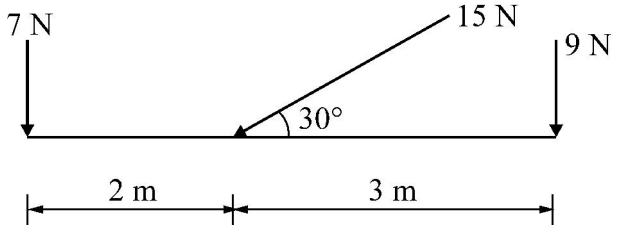

Fig. – 4

(b) A block is weighing 1000 N, resting on a horizontal plane requires a pull of 400 N to start its motion, when applied at an angle of 30° with the horizontal. Find the coefficient of friction, alongwith normal reaction, force of friction and resultant reaction (Total reaction). Refer Fig.-5.

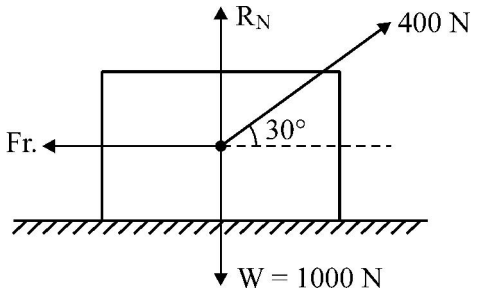

Fig. – 5

(c) Locate the position of centroid for the following L-section (Ref. Fig.-6) :

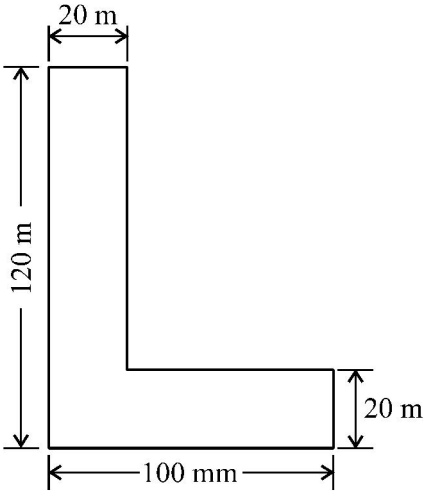

Fig. – 6

(d) Find the resultant of parallel forces as shown in Fig.-7 by graphical method and show its position.

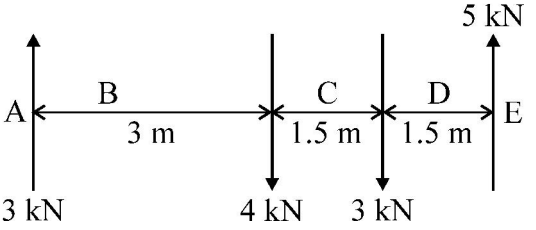

Fig. – 7

(e) Locate the centre of gravity for the solid as shown in Fig.-8.

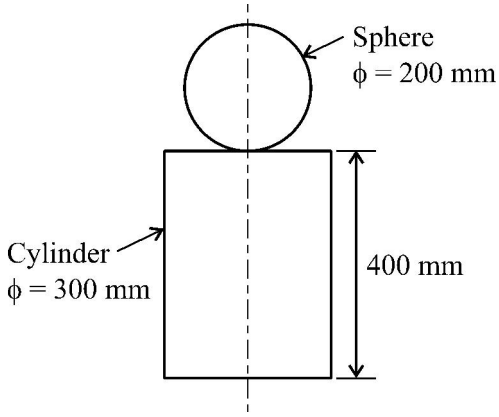

Fig. – 8

5. Attempt any TWO of the following : 12

(a) A block of weight 450 N is placed on rough inclined plane making inclination of 20° with horizontal. If $\mu = 0.24$, calculate the value of force to be applied parallel to the plane just to move the block up the plane.

(b) Find the resultant of concurrent force system as shown in Fig.-9. Magnitude and direction by analytical method.

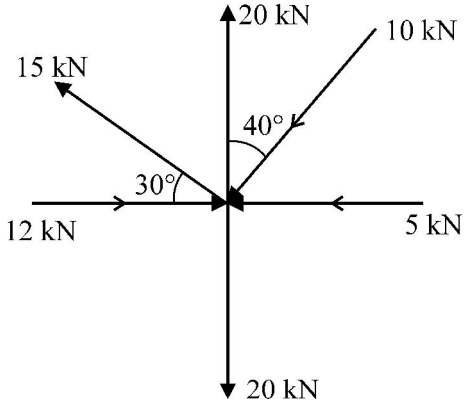

Fig. – 9

(c) Calculate the moment about point A and point B for the force system shown in Fig.-10.

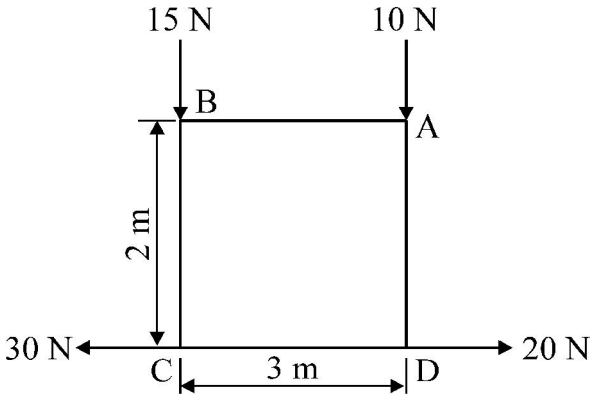

Fig. – 10

6. Attempt any TWO of the following : 12

(a) Calculate the coefficient of friction, if a block weighing 600 N; resting on a rough horizontal plane can be moved by a force of 150 N applied at an angle of 60° with the horizontal (Ref. Fig.-11).

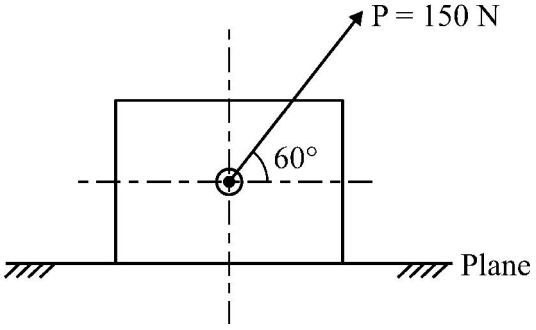

Fig. – 11

(b) Find the centroid of the area as shown in Fig.-12.

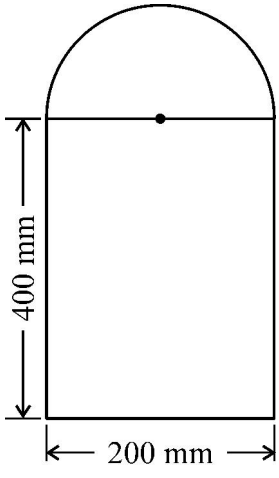

Fig. – 12

(c) Find the centroid of an inverted T-section from the bottom, if flange is (60 × 10) cm and web is (10 × 60) cm.